Product Services Information

INSTALLATION INSTRUCTIONS

JOHN DEERE

JOHN DEERE

HPX Gator™ Hitch and Display

Compatible with MY18+ models HPX615E and HPX815E.

Safety

Read the general safety operating precautions in your machine installation instruction manual for additional safety information.

*Use only with John Deere approved attachments

Using your Instruction Manual

Read the Installation Manual in entirety, especially the safety information, before operating.

If your Instruction Manual has a section called Preparing the Machine, it means that you will have to do something to your tractor or vehicle before you can install the attachment. The Assembly and Installation sections of this manual provide information to assemble and install the attachment to your tractor or vehicle. Use the Service section to make any needed adjustments and routine service to your attachment.

This product was manufactured by Superior Tech, Inc, a John Deere Licensee, located at 1811 Rohrerstown Road, Lancaster, PA 17601. If you have any questions or concerns with the assembly, installation, or operation of this attachment, see your local John Deere dealer or call Superior Tech at 1-888-867-2238 for assistance.

Parts in Kit

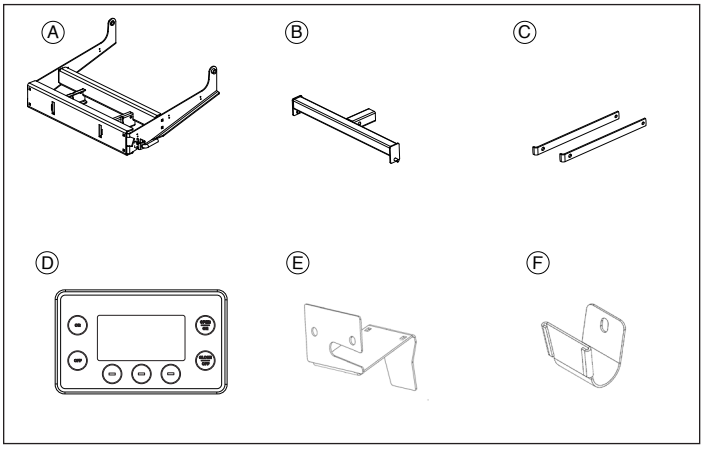

Qty.	Description
1	Attachment Mounting Frame (A)
1	Lower Frame (B)
2	Support (C)
1	Display (D)
1	Display Bracket (E)
1	Bracket Receiver (F)

Wiring Kit

Qty.	Description
1	Power Harness
1	Display Cable
2	M5 x 8 mm Button Head Screw
2	M5 Washer
6	Push in Cable Clamps
10	Wire Ties

Hardware Bag

Qty.	Description
2	1/2” x 2” Clevis Pin
1	5/8” x 3” Clevis Pin
1	Hitch Pin Clip
4	Bowtie Clip

Assembly

1. Use 33/64” drill to enlarge hole (A) on both sides off vehicle.

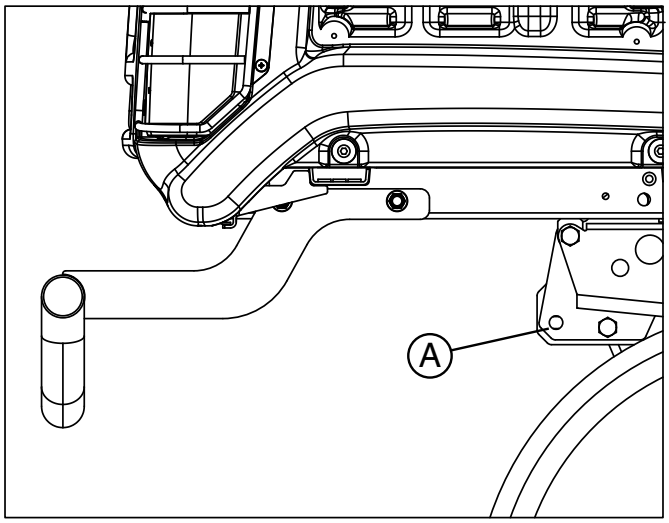

2. Insert Lower Frame (B) into the utility vehicle’s hitch receiver. Fasten with 5/16” x 3” Clevis Pin and Hitch Pin Clip.

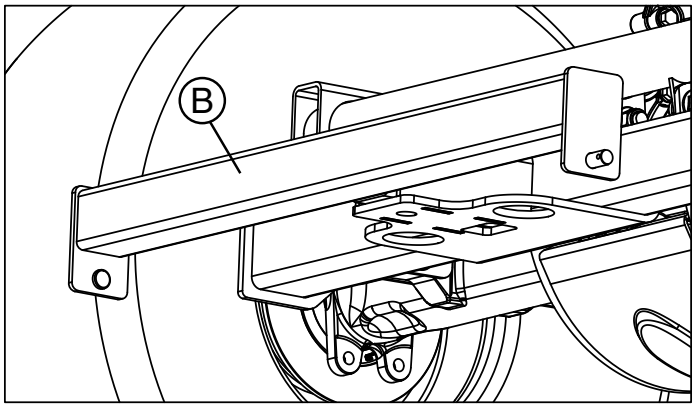

3. Connect Attachment Mounting Frame (C) to utility vehicle using 1/2” x 2” Clevis Pins through holes drilled during step 1 (D). Fasten clevis pins with bowtie clips. (recommend two people do this installation)

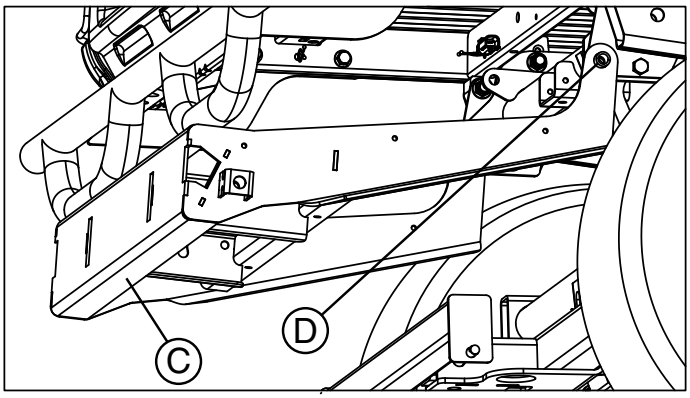

4. Slide Supports (E) through the slots in the Attachment Mounting Frame at location (F) with the bent end at the top facing towards the outside. Place lower holes over the pins on the Lower Frame (G) and secure with bowtie clips.

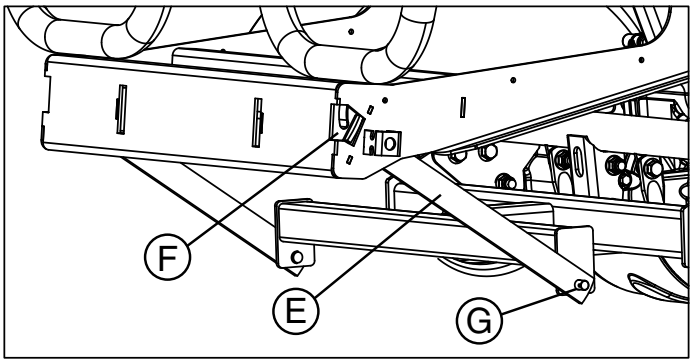

5. Slide spreaders receiver arms (J) into the slots (K) until it clicks to lock into place. Be sure the hitch latches securely. Adding grease to the slots makes installation easier. (It is recommended that two people lift the spreader into place)

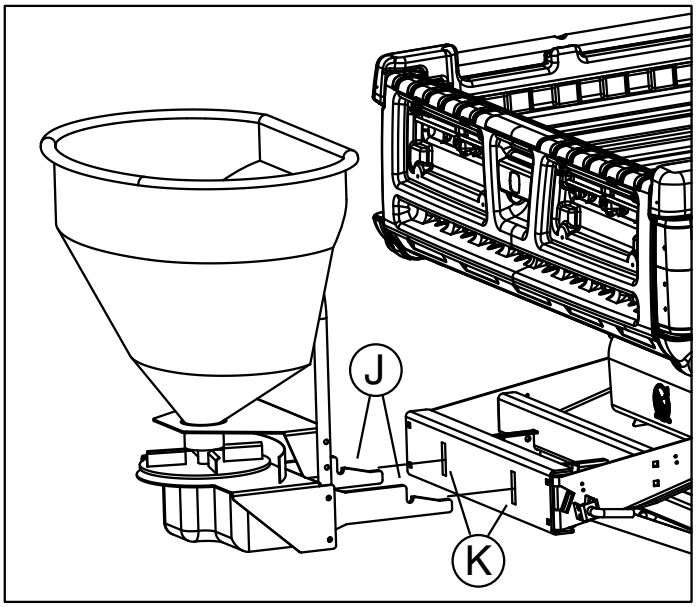

Install Display and Wiring

Wire Harness Installation

1. Remove the four plastic pins (A) to remove the center console cover.

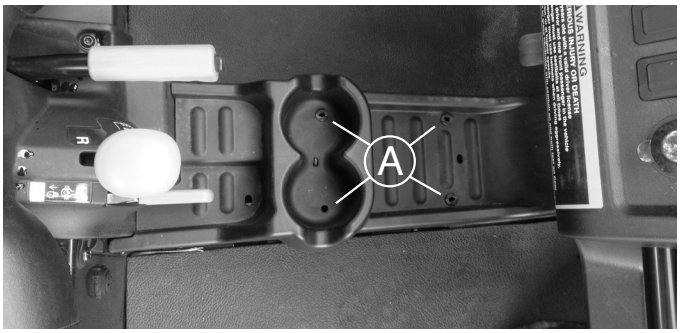

   4 seat Gator - Remove four additional plastic pins (B) to remove the rear center cover. Remove the front seat and plastic storage compartment to improve access to the center channel.

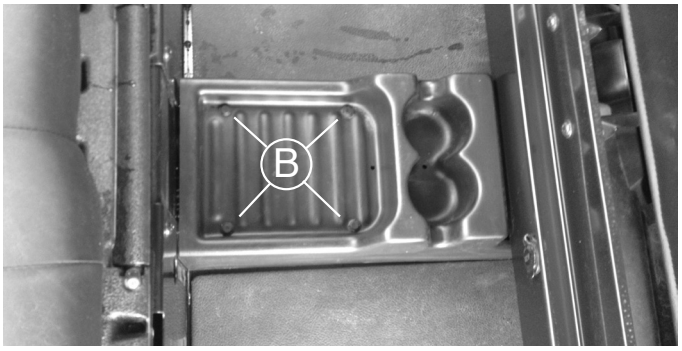

2. 2 seat Gator - Lift the passenger seat to access the battery. Route the end of the harness with the circular connector from the battery compartment down into the center channel to the front of the vehicle behind the dashboard following the vehicle wiring harness.

   4 seat Gator - Lift the rear seat and remove the plastic pin and battery cover to access the battery compartment. Route the end of the harness with the circular connector from the battery compartment down into the center channel to the front of the vehicle behind the dashboard following the vehicle wiring harness.

3. Open the hood and feed the circular connector through the opening for the hood release at the center of the dashboard.

4. Connect the 2 pin connector (C) to the accessory port (D) located on the drivers side under the hood and secure to the vehicle harness with a wire tie.

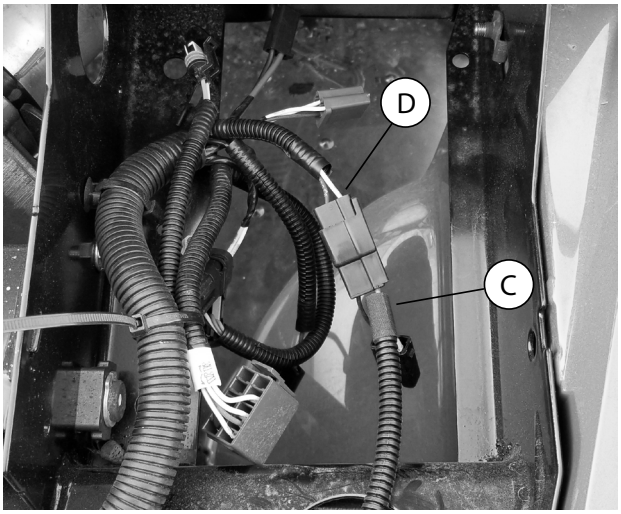

5. Route the other end of the harness from the battery compartment into the engine compartment and connect the 2 pin connector to the rear power port (E). Secure the harness to the main vehicle harness.

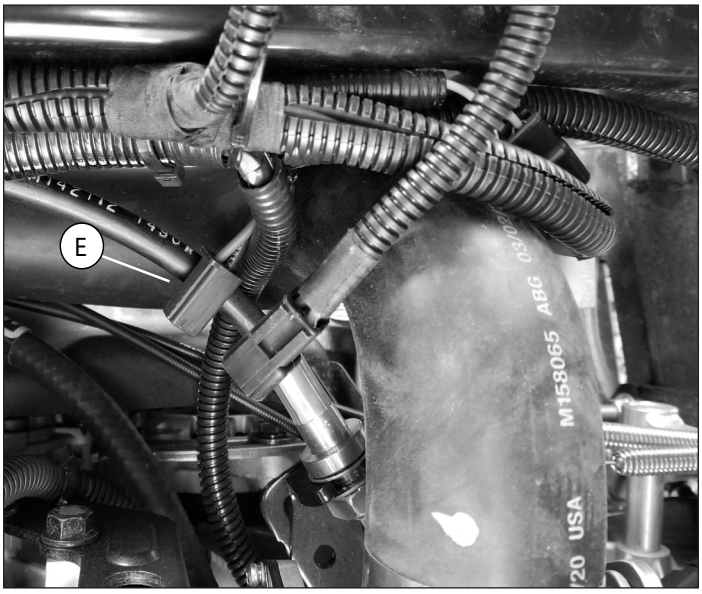

6. Loop the remainder of the harness under the frame rail and attach to the outside of the right frame rail. Allow the 2 connectors to extend 2-4 inches past the end of the frame rail and secure with a wire tie trough hole (F). Secure the harness to the frame rail with clips (G).

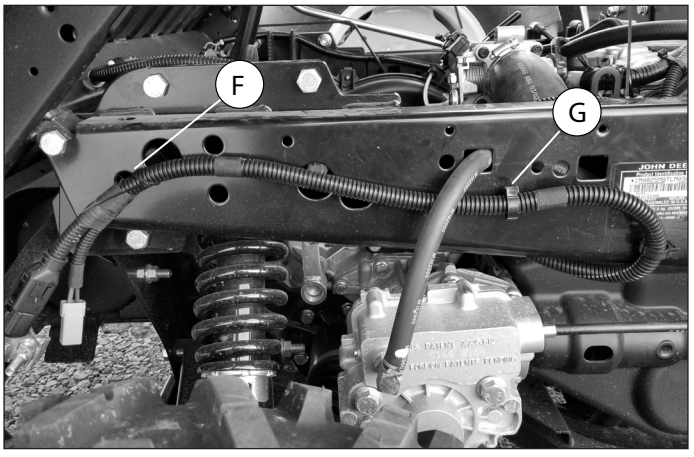

1. Pull slack from both ends of the harness into the battery compartment and secure with a wire tie. Ensure harness does not contact any moving part or high temperature part on the vehicle.

2. Open hood and remove plastic storage tray. Remove the nut (H) from the hood latch pin (J). Attach the display receiver (K) to the end of the bolt and replace nut. To ensure the hood latches properly, replace bolt in the same position as removed.

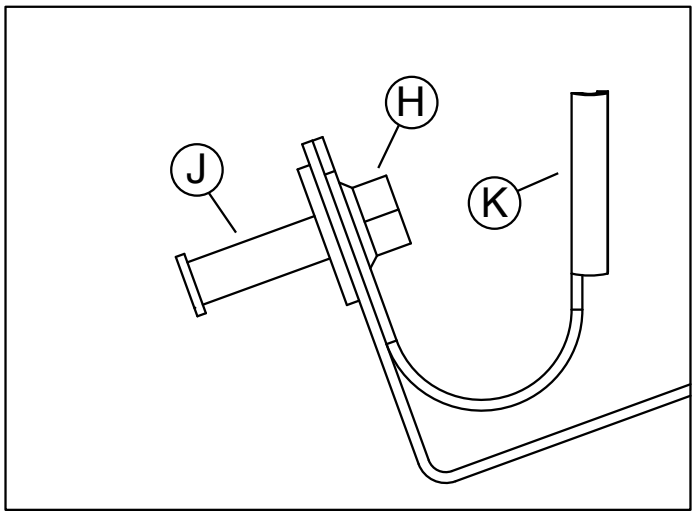

3. Attach the display harness (L) to the connector on the rear of the display (M).

NOTE: Hand tighten the connector coupling nut to 0.5-1.0 ft-lb. Be careful not to cross thread the nut on the plastic threads. Do not twist the overmolded portion of the connector, only twist the metal coupling nut or damage may occur to the display connector pins.

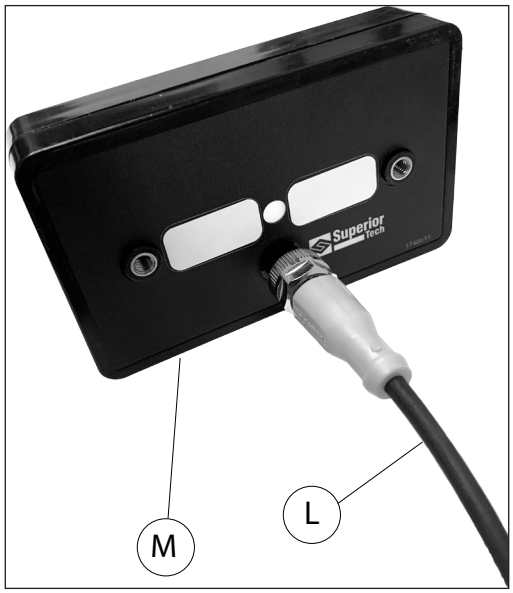

4. Install the Display (N) to the Mounting Bracket (P) using two M5 x 8 pan head screw (Q) and two M5 washers (R).

NOTE: Tighten the screws to 4-5 ft-lb. Do not over tighten or damage may occur to the threaded inserts and plastic housing.

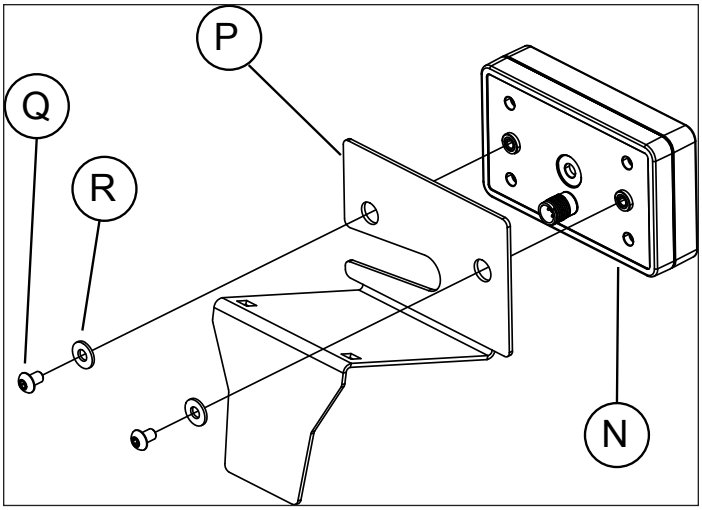

5. Secure the display harness to the mounting bracket with a wire tie through the holes on either side of the harness.

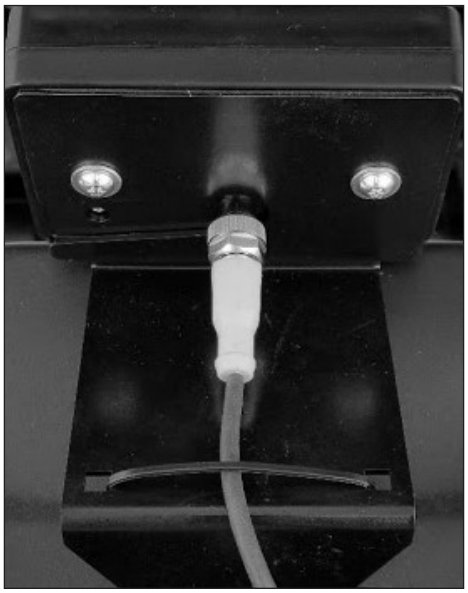

6. Mount the display by sliding the bracket into the receiver. Press down on the bracket firmly.

7. Route the display cable (S) to the right of the hood latch and connect to the power harness (T).

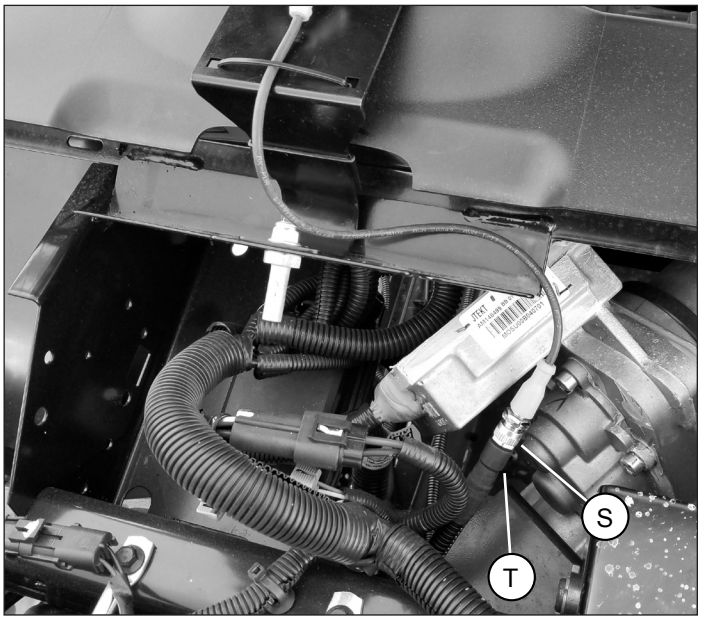

Operation

Raising the utility vehicle bed

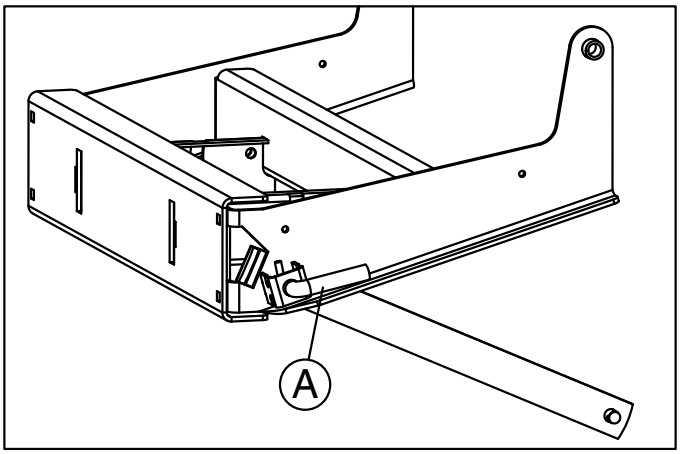

If you wish to raise the bed without removing the attachment mounting frame, it can be folded down by pulling the Pins (A) and turning to lock them out. (Lift up on the frame when pulling the second pin and lower gently to the ground). To put the attachment mounting frame back into position, release the pins and lift the frame until it clicks into position.

Be sure the attachment mounting frame is locked in the up position when operating the vehicle. Driving with the frame folded down may damage the frame or vehicle.

Release attachment

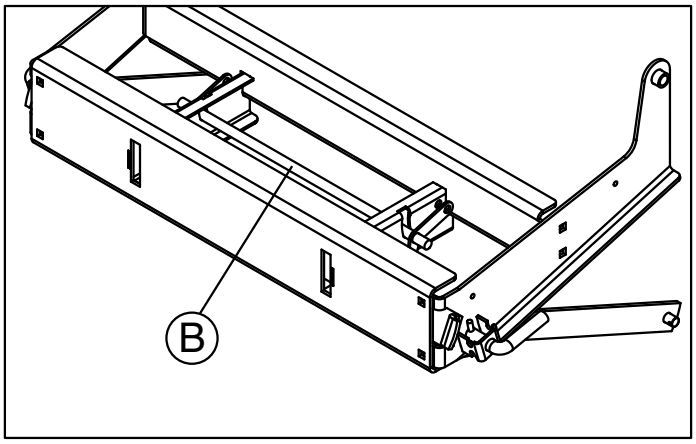

To release an attachment, lift rod (B) and slide the attachment forward slightly. This will unlock it, enabling it to be pulled out.